SLENDER

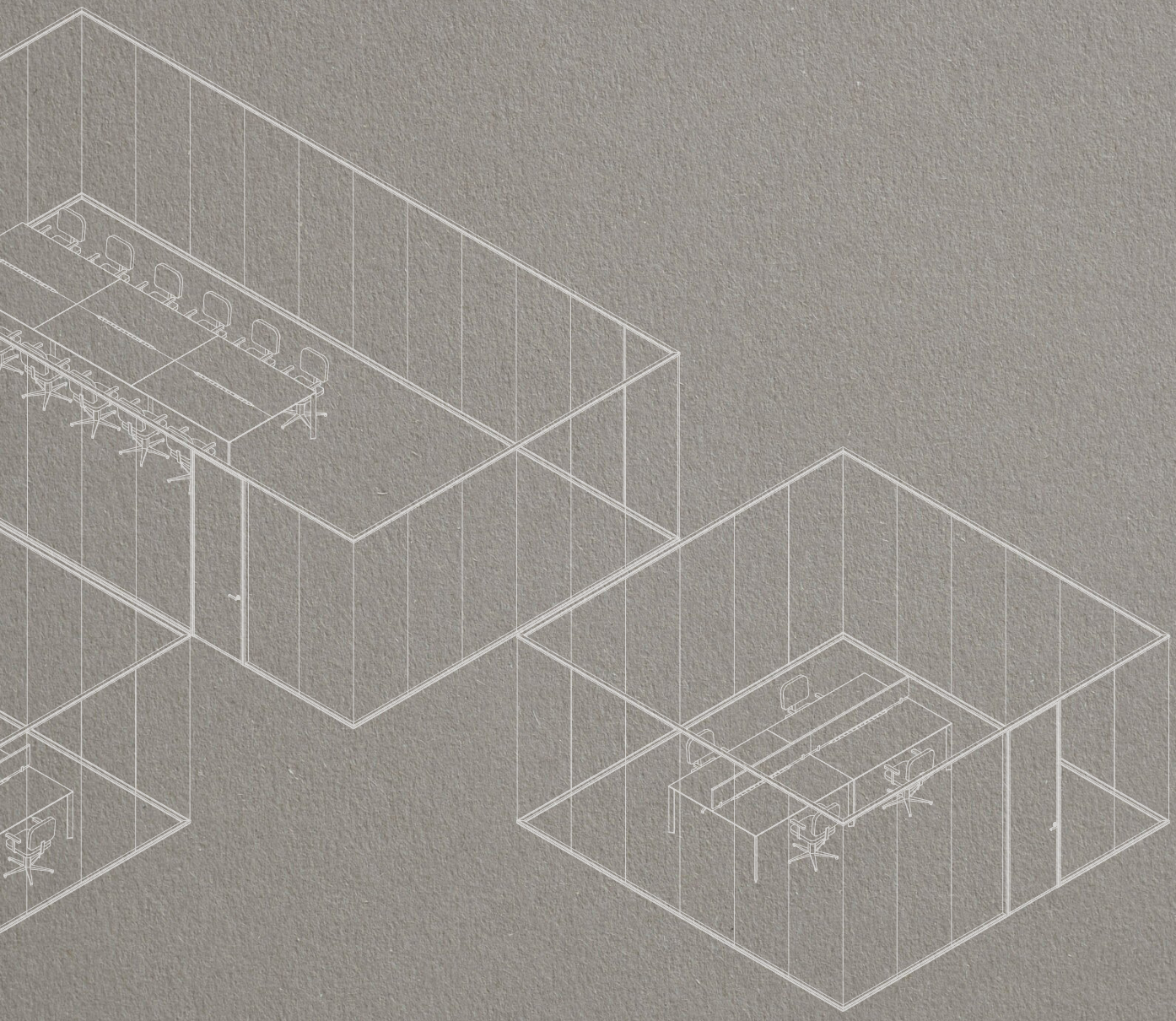

PRODUCT DATA SHEET

CITTERIO

The Slender partition wall system was developed in response to a new way of designing workspaces. In an environment where flexibility is increasingly essential and project timelines are becoming ever shorter, Slender combines expertise and innovation in a solution that delivers technical performance together with exceptional aesthetic versatility. The result is a high-quality system designed to meet the operational demands of large-scale international projects.

Minimal profiles and clean, defined geometries are the hallmarks of the system, the result of a meticulous process of technical and engineering optimization.





SINGLE GLAZED OFFSET PARTITION

The Slender single-glazed offset partition system features a 42.5 mm (1 11/16") extruded aluminium profile combined with a telescopic adjustment system.

It is compatible with a wide range of laminated glass configurations, with or without an acoustic interlayer, allowing the system to meet different sound insulation requirements.

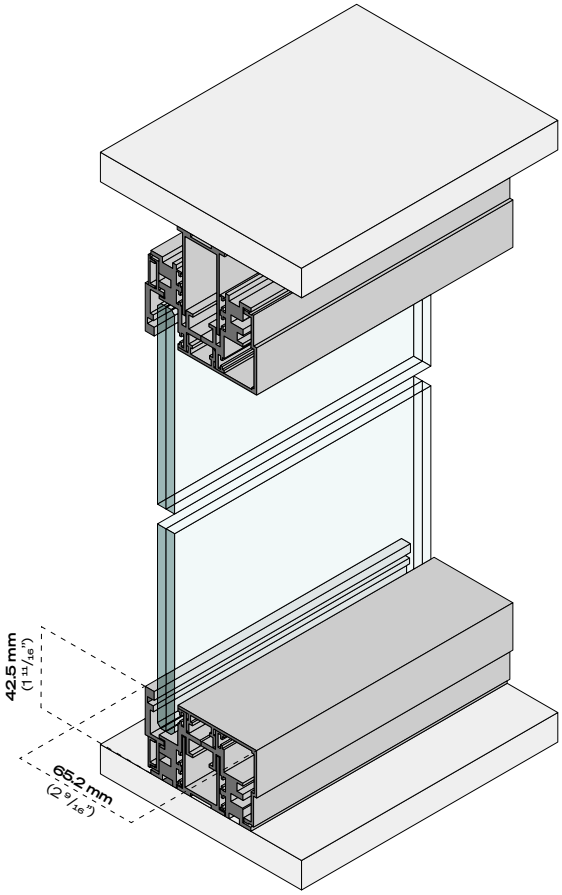

PROFILES

- **Profile thickness: 42.5 mm** (1 11/16")
- **Profile width: 65.2 mm** (2 9/16")
- **Installation tolerance: ± 15 mm** (± 9/16")

GLASSES

- **5+5.1** — 5 mm (13/64") + 5 mm (13/64") laminated glass with a 0.38 mm (1/64") clear PVB interlayer.
- **5+5.2A** — 5 mm (13/64") + 5 mm (13/64") laminated glass with a 0.76 mm (2/64") acoustic PVB interlayer
- **6+6.1** — 6 mm (15/64") + 6 mm (15/64") laminated glass with a 0.38 mm (1/64") clear PVB interlayer
- **6+6.2A** — 6 mm (15/64") + 6 mm (15/64") laminated glass with a 0.76 mm (2/64") acoustic PVB interlayer



SINGLE-GLAZED OFFSET PARTITION

In the Slender single-glazed offset partition system, the glass panel is always positioned on the corridor side of the partition. Continuity between adjacent glass panels is ensured by dedicated connection elements, available for straight, two-way and three-way junctions.

As standard, the joints are made of transparent gloss polycarbonate, minimizing their visual impact while preserving the lightness and seamless appearance of the glazed partition. Upon request, the joints can also be supplied in natural aluminium or with a painted finish.

In configurations with glazed returns, the glass panel cannot be positioned centrally within the profile. Therefore, during the design phase it is essential to specify whether the glass should be located on the right-hand or left-hand side of the return, ensuring the correct geometric alignment and visual continuity of the overall composition.

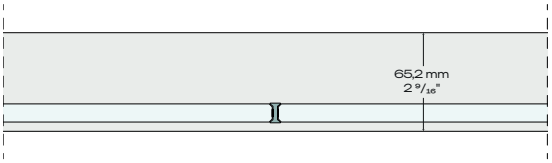


Linear connection

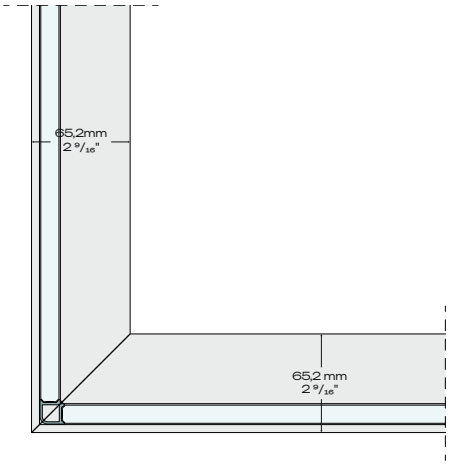


Two-way connection

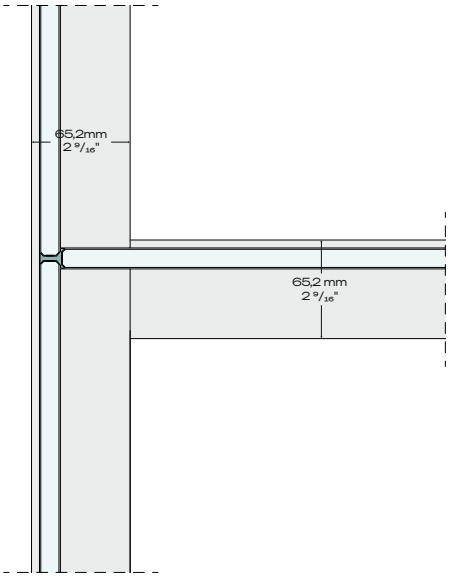


Three-way connection



CITTERIO

PRODUCT DATA SHEETS

DOUBLE-GLAZED PARTITION

The Slender double-glazed partition system features a 42,5 mm (1 11/16”) extruded aluminium profile equipped with a telescopic adjustment system, ensuring fast and precise installation.

The configuration is compatible with a wide range of laminated glass options and delivers high levels of acoustic performance.

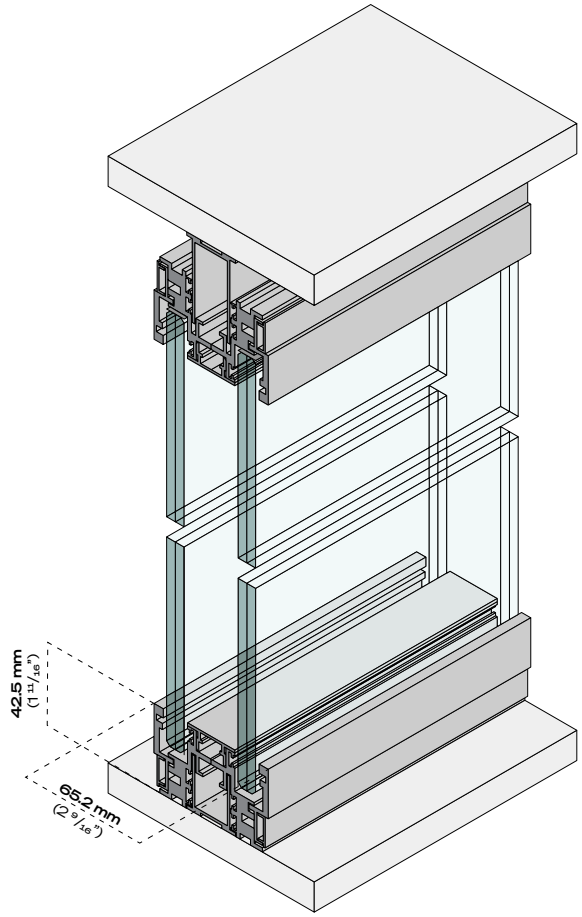

PROFILES

- **Profile thickness: 42.5 mm** (1 11/16”)
- **Profile width: 65.2 mm** (2 9/16”)
- **Installation tolerance: ± 15 mm** (± 9/16”)

GLASSES

- **5+5.1** — 5 mm (13/64”) + 5 mm (13/64”) laminated glass with a 0.38 mm (1/64”) clear PVB interlayer
- **5+5.2A** — 5 mm (13/64”) + 5 mm (13/64”) laminated glass with a 0.76 mm (2/64”) acoustic PVB interlayer
- **6+6.1** — 6 mm (15/64”) + 6 mm (15/64”) laminated glass with a 0.38 mm (1/64”) clear PVB interlayer
- **6+6.2A** — 6 mm (15/64”) + 6 mm (15/64”) laminated glass with a 0.76 mm (2/64”) acoustic PVB interlayer



Linear connection

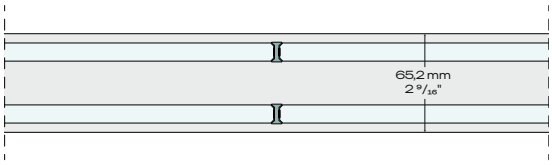



Two-way connection

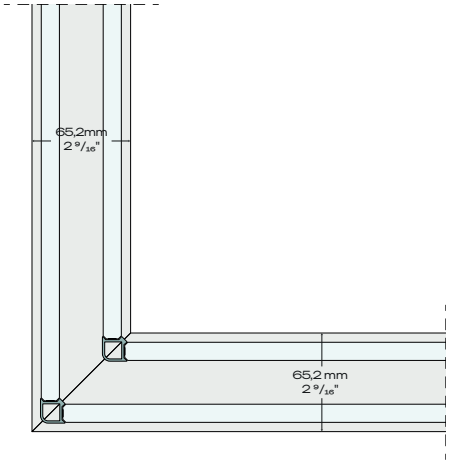



Three-way connection

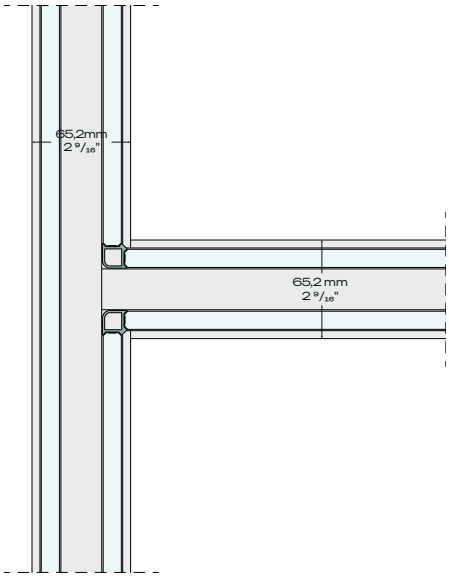

DOUBLE-GLAZED PARTITION

In the double-glazed configuration, the two glass panels are positioned on opposite sides of the profile, creating an internal cavity.

Continuity between adjacent glass panels is ensured by dedicated connection elements, available for straight, two-way and three-way junctions. These joints connect both glazed surfaces, providing structural stabilitynand precise alignment, even at corners and intersections.

As standard, the joints are manufactured from transparent gloss polycarbonate, minimizing their visual impact while preserving the transparency and lightness of the partition. Upon request, they can also be supplied in aluminium or with a painted finish, ensuring material and colour continuity with the partition profiles.

The connection elements are bonded between the glass lites using a high-strength transparent adhesive, ensuring stable and precise fixing without compromising the clean appearance of the glazed surfaces.

SOLID PARTITION

The Slender solid partition system features a 53 mm (2 1/16") module designed to deliver high levels of acoustic insulation.

The cavity between the two finished panels is filled with rock wool insulation and steel sheets, providing enhanced sound performance while ensuring the system's structural integrity.

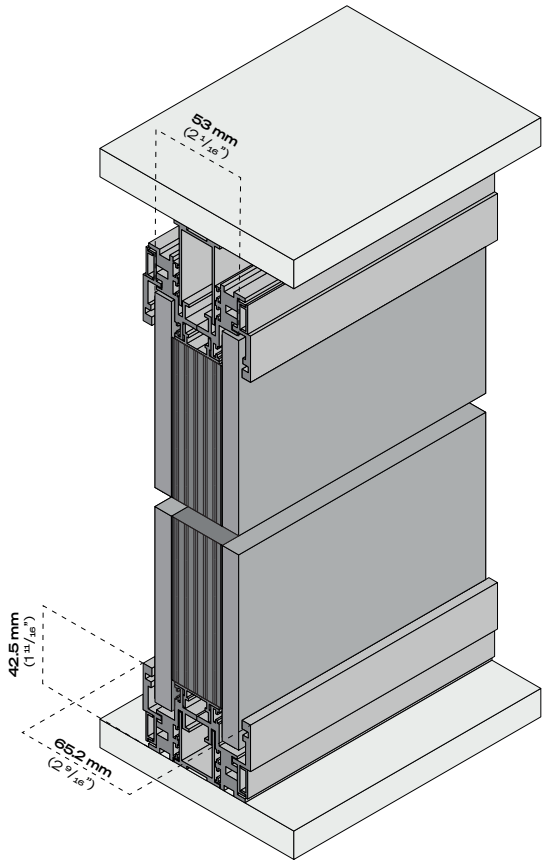

PROFILES

- **Profile thickness: 42.5 mm** (1 11/16")
- **Profile width: 65.2 mm** (2 9/16")
- **Insulated panel thickness: 53 mm** (2 1/16")
- **Installation tolerance : ±15 mm** (± 9/16")

INSULATION TYPOLOGIES

Depending on the required level of acoustic performance, the Slender solid partition system is available in three different configurations:

- **Type A**: Rock wool insulation only
- **Type B**: Rock wool insulation + 1 metal sheet, 1mm (3/64") thick
- **Type C**: Rock wool insulation + 2 metal sheets, 1mm (3/64") thick each





CITTERIO PRODUCT DATA SHEETS

PARTITION HEIGHTS

The Slender partition system is designed to achieve a maximum standard height of 3000 mm (118 $^{7}/_{64}$”), ensuring structural stability and installation accuracy.

For projects requiring greater heights, configurations with a transom are available, allowing a maximum overall height of 4000 mm (157 $^{31}/_{64}$”). The transom extends the partition vertically while maintaining the system’s structural integrity and design consistency.

Configurations exceeding the standard height must be reviewed and approved by the Citterio Technical Department, which will assess their feasibility based on the partition layout, module dimensions, glass specification, installation conditions, and the specific requirements of the project.

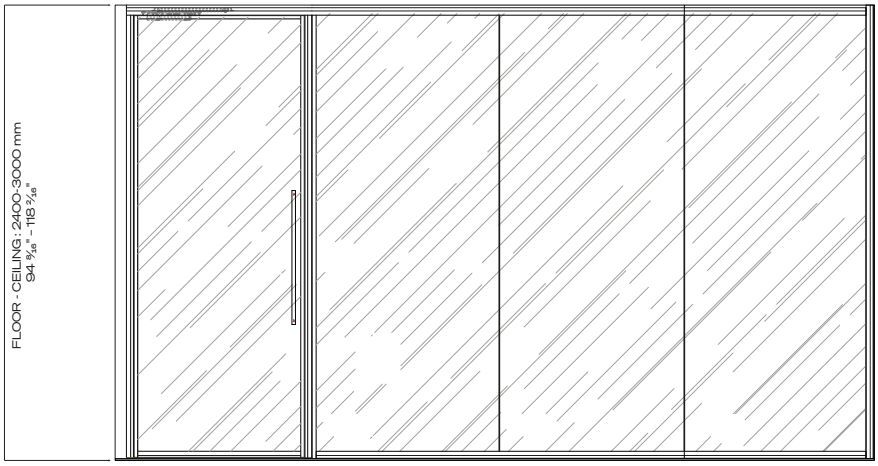

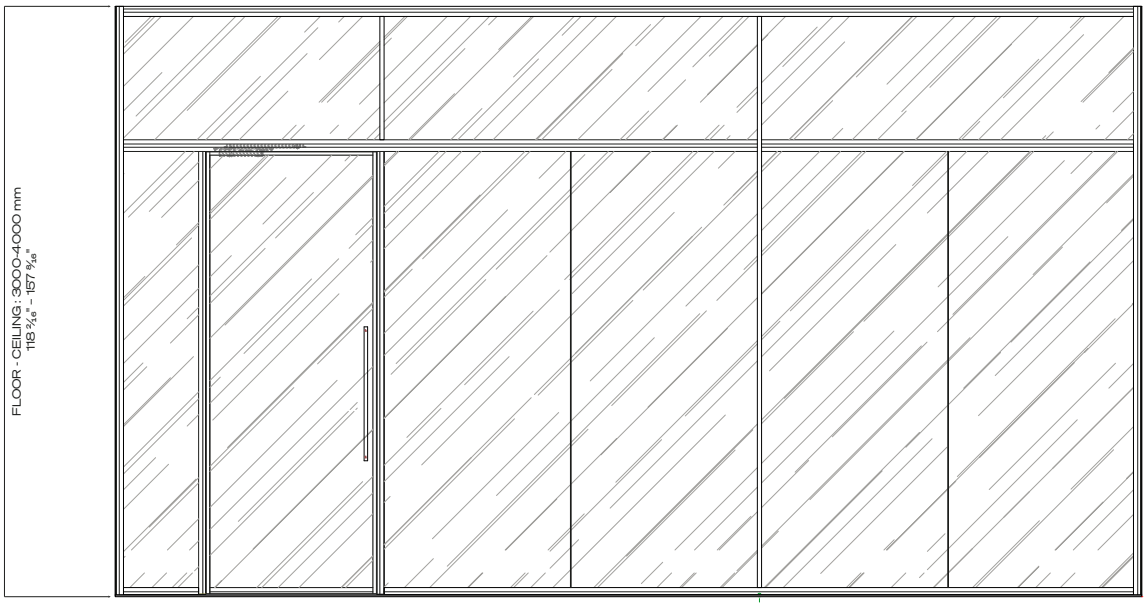

WALL-START PROFILES

The Slender partition system offers three wall-start profiles, each developed to meet specific design and installation requirements:

- **27 mm (1 1/16") non-telescopic wall-start profile** – Featuring a compact section, this profile is ideal where the supporting surfaces are even and no compensation for on-site tolerances is required.
- **42,5 mm (1 11/16") non-telescopic wall-start profile** – This fixed profile does not incorporate an adjustment mechanism and is suitable for applications where dimensional compensation is unnecessary. As the previous one, also this profile is ideal where the supporting surfaces are even and no compensation for on-site tolerances is required.
- **42,5 mm (1 11/16") telescopic wall-start profile** – Incorporating an adjustment mechanism, this profile compensates for surface irregularities and construction tolerances. It simplifies installation while ensuring greater precision and adaptability, maintaining visual consistency with the system's horizontal profiles.

The configuration of the vertical and horizontal profiles must always include at least one telescopic profile. A non-telescopic vertical wall-start profile cannot be combined with non-telescopic horizontal profiles (or vice versa), as this configuration would not allow the correct installation of the glass panels or solid panels.

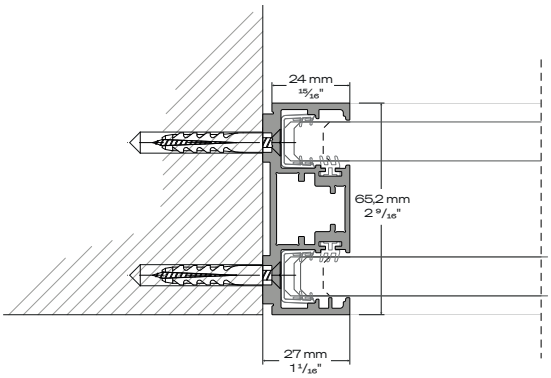



27 mm (1 1/16") non-telescopic wall-start profile

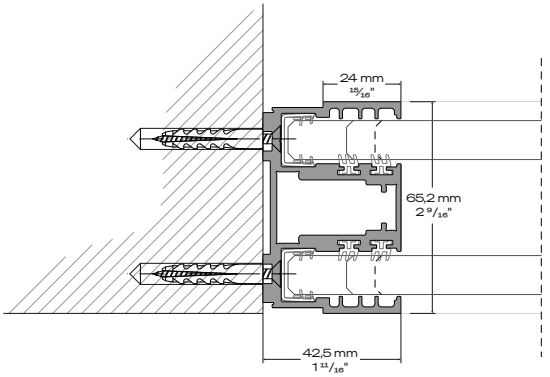



42.5 mm (1 11/16") non-telescopic wall-start profile

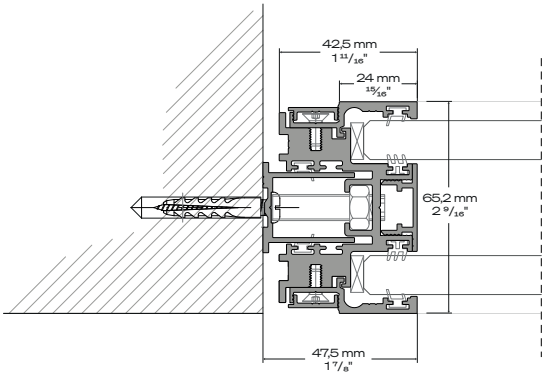



42.5 mm (1 11/16") telescopic wall-start profile



CITTERIO

PRODUCT DATA SHEETS

PRIVACY SOLUTIONS

The Slender partition system offers a wide range of visual privacy solutions to meet different design requirements.

Clear, extra-clear, frosted and fluted glass are available as standard. Upon request, the system can also be configured with gradient glass, switchable smart glass, laminated glass with integrated fabric, and coloured glass.

Depending on the partition configuration and the project's technical requirements, the system can also be prepared to accommodate an integrated Venetian blind.

These options allow designers to achieve the desired balance between transparency and privacy while maintaining visual consistency throughout the project.



DOORS

The Slender system includes three types of doors with aluminum profiles:
- Solid hinged door
- Double glazed hinged door
- Double glazed sliding door

All door types are available in single or double leaf versions.

Solid hinged door

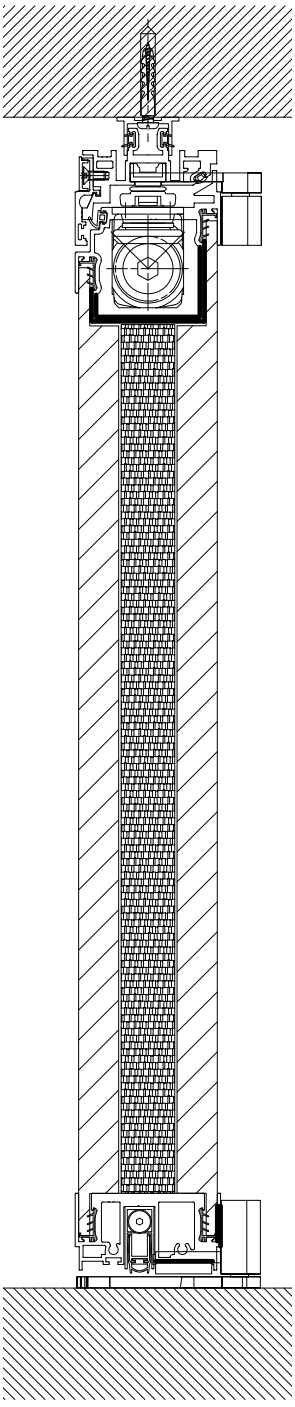

Double glazed hinged door

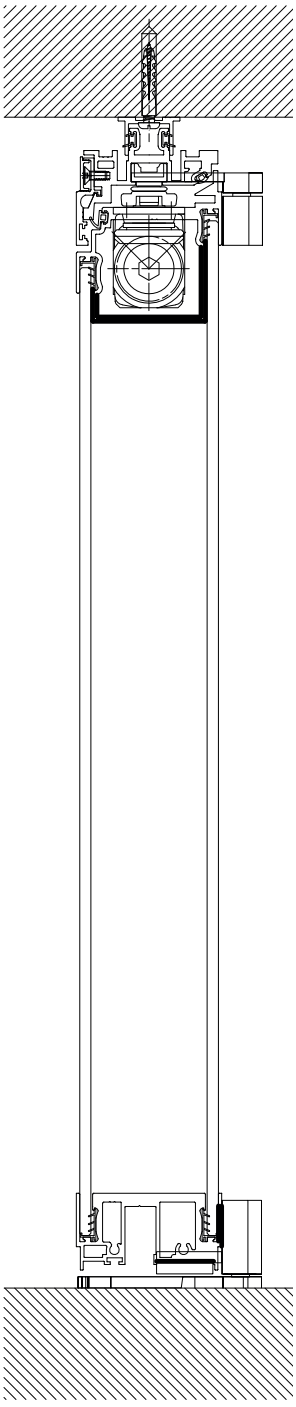

Double glazed sliding door

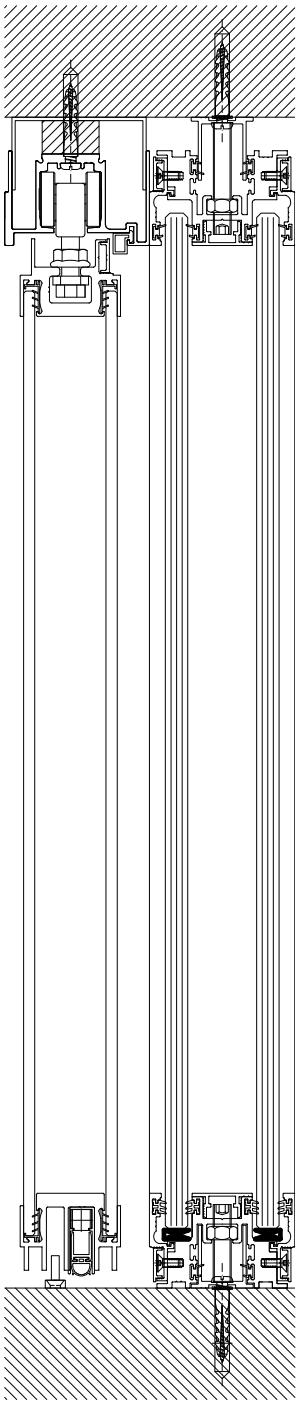



Vertical handle - RP



HANDLES AND LOCKS

The Slender system offers three handle solutions, which can be selected according to the door type and the specific project requirements.

The RP pull handle, with a vertical length of 762 mm (30”), features a clean, linear design. Its generous gripping surface facilitates door operation and ensures intuitive use, including in high-traffic environments. Its simple, well-proportioned geometry integrates seamlessly with the minimal design language of the Slender profiles, emphasizing the verticality of the door.

The Link lever handle, designed by Piero Lissoni, expresses an essential industrial aesthetic through carefully balanced proportions and a subtly softened profile. In the configuration with a round rose measuring Ø 47 × 10 mm (Ø 1 7/8” × 3/8”), it has an overall length of 142 mm (5 9/16”) and a projection of 57 mm (2 1/4”). Its balanced and understated design provides a natural, ergonomic grip, making it particularly suitable for projects requiring formal consistency, functionality and visual rigour.

The Chiara lever handle is defined by a slender 15 mm (9/16”) section and a U-shaped grip that curves back towards the door leaf. In the configuration with a round rose measuring Ø 47 × 10 mm (Ø 1 7/8” × 3/8”), it has an overall length of 149 mm (5 7/8”) and a projection of 68 mm (2 11/16”). This configuration ensures a secure and comfortable grip, while its simple, timeless character makes it particularly suitable for workplaces and environments subject to frequent use.

Upon request, doors can be prepared for the installation of panic exit devices. Custom handles may also be specified, subject to a feasibility assessment by the Citterio Technical Department and Sales Department.

The system can be completed with locks compliant with European or American standards, or with electrically operated locks, to be specified according to the access, control and security requirements of the project.



Lever handle - Link



Lever handle - Chiara

DOOR ACCESSORIES

Slender doors are completed by a series of integrated technical components designed to ensure precise movement, reliability and visual continuity with the partition system.

On hinged doors, the concealed door closer is integrated into the upper structure of the door leaf, minimizing the presence of visible components and ensuring controlled closing. The pivot mechanism contributes to smooth operation and maintains a clean, essential geometry consistent with the minimal design of the partition system.

Both hinged and sliding doors are also equipped with an automatic drop-down seal at the bottom edge. When the door closes, the seal lowers until it comes into contact with the floor, improving the sealing performance of the door leaf and contributing to the overall acoustic insulation of the system.

In sliding configurations, the door leaf moves along a ceiling-mounted track and stops against a dedicated lateral stop. As standard, the track is supplied in a length sized according to the dimensions of the sliding door and its required travel.

For specific aesthetic requirements, longer tracks can be supplied upon request, up to a maximum length of 3000 mm (118 ⅛”). This solution allows the track to extend beyond the actual travel of the door leaf, improving its integration within the wall composition and reducing its visual prominence. Even when an extended track is specified, the door stop is positioned at the standard location established for the door, ensuring that the stopping point and correct operation remain unchanged.



Sliding door drop seal



Sliding door jamb



Ceiling track



Concealed door closer



Hinged door drop seal



Pivot hinge

ACOUSTIC PERFORMANCE

The Slender partition system has been performance tested by an independent laboratory in accordance with the configurations and assemblies specified in the table below.

The values shown refer exclusively to the tested specimens and should therefore be considered indicative. Actual in-service performance may vary depending on the partition configuration, the dimensions and geometry of the space, the presence of doors and junctions, installation conditions, the connections to the building structure, and the overall acoustic characteristics of the environment.

For applications with specific performance requirements, a technical assessment based on the project configuration is recommended.

TYPE	GLASS A	GLASS B	INSULATION	RW (DB)
Single-glazed offset partition	5+5.1	-	-	34
	5+5.A	-	-	36
	6+6.1	-	-	35
	6+6.2A	-	-	37
	6+8.2A	-	-	38
Double-glazed partition	5+5.1	5+5.1	-	42
	6+6.A	6+6.A	-	46
Solid partition	-	-	Rock wool	41
	-	-	Rock wool + n°1 metal sheet	44
	-	-	Rock wool + n°2 metal sheets	47
Double-glazed hinged door	5T	5T	-	32/36
	6T	4+4.2A	-	39
	5+5.2A	4+4.2A	-	41
Double-glazed hinged door with threshold	6T	4+4.2A	-	41
	5+5.2A	4+4.2A	-	44
Solid hinged door	-	-	Rock wool	35
	-	-	Rock wool + n°1 metal sheet	37

ENVIRONMENTAL PRODUCT DECLARATION (EPD)

The glazed versions of the Slender partition system have been awarded EPD (Environmental Product Declaration) certification, providing transparent, independently verified information on the product's environmental impacts throughout its life cycle.

Specifically, the certification applies to the single-glazed offset partition and the double-glazed partition configurations.





PROFILE FINISHES



A001
Natural Oxidised Aluminium



AL01
Polished Aluminium



A002
Oxidised Black Aluminium



AS01
Brushed Olive Brown Oxidised Aluminium



AV02
Bronze Coated Aluminium

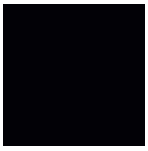

R9005
Matte Painted Jet Black



R7048
Matte Painted Platinum Grey



R7024
Matte Painted Graphite Grey

R9010
Matte Painted Pure White

R9016
Matte Painted Traffic White

GLASS PANELS

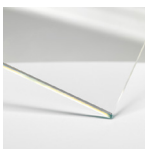

VTR
Clear Glass

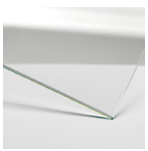

VTX
Extra-Clear Glass

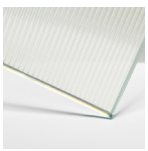

VCA
Fluted Clear Glass

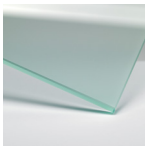

VAC
Acid-etched Glass

SOLID PANEL FINISHES (MELAMINE)

M069
Ice White

M068
Pure White

M070
Parchment Grey



M066
Line Grey



M071
Orion Grey



M010
Black



N060
Light Oak



N062
Brown Ash



N063
Titanium Larix

SOLID PANEL FINISHES (WOOD)



WIR1
Brushed Natural Oak



WIR2
Brushed Coffee Oak



WIR5
Canaletto Walnut

SOLID PANEL FINISHES (LACQUERED)

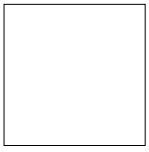

0101
White



0200
Black

0132
Lime Green



0160
Platinum



0131
Dark Green

PRODUCT CARE AND MAINTENANCE

Citterio's products are designed to meet the customers' need for elegance, functionality, long-lasting and quality of the spaces. Thanks to the range of materials, production techniques, and the careful selection of the best finishes, Citterio's products are the result of an ongoing commitment to offer original solutions for realising one's working dimension. Since its foundation in 1958, Citterio has been an important example of "Made in Italy". This SLENDER cleaning and maintenance guide helps to keep furniture in good condition by extending its lifespan, ensuring functionality is maintained and limiting the signs of the passage of time.

Tips for care and cleaning of materials
These instructions have been divided according to the materials, and provide guidelines on maintenance operations for SLENDER. For all the surfaces, the use of a soft cloth and neutral detergents is recommended. Before using any cleanser, it is preferable to test it on a small, non-visible area.

WOOD

Natural wood finishes are particularly delicate and subject to colour changes due to the natural ageing process of the wood.

To clean wood surfaces it is a good practice to avoid the use of sprays and chemicals in general. Use a slightly damp cloth instead or, if necessary, dampened in slightly soapy water (use neutral soap). Rinse with a damp cloth, well wrung, and dry all surfaces until completely dry. Use cleaning liquids moderately, because excessive use can cause infiltrations between the panel and the edging, with possible swelling of the panel.

IT IS STRONGLY RECOMMENDED TO AVOID:
Alkaline detergents, detergents containing abrasives, soda or solvents, ammonia or acetone. Avoid furniture wax. Do not use pumice, steel wool, rough cloths or other abrasives.

LAMINATE / MELAMINE FINISHED

Laminate panels are made up of wood-base agglomerates, coated using hot or cold gluing with laminate sheets made of kraft paper support impregnated with phenolic resins, and on the outside by decorative papers impregnated in melamine resin. There are other variants of laminate material, e.g. full-thickness or full-colour layered laminate, or with aluminium support, etc.

Melamine finished panels are made of wood-base agglomerates, coated decorative high-pressure pressed papers impregnated in melamine resin. For regular cleaning use a soft cotton cloth damped with warm water and non-aggressive detergents, or with a mixture of 95% water and 5% denatured alcohol.

Use cleaning liquids moderately, because excessive use can cause infiltrations between the panel and the edging, with possible swelling of the panel.

IT IS STRONGLY RECOMMENDED TO AVOID:
Alkaline detergents, abrasive detergents or soda. Do not use pumice, metal wool, rough cloths or other abrasives, wax or other protective treatments.

LACQUERED

Lacquered surfaces need particularly careful maintenance to avoid scratches. They can be cleaned with neutral soap or alcohol diluted with a lot of water, drying immediately with a soft, preferably white, non-abrasive cloth. The first time the cloth might get lightly stained. This is due to the presence of paint powder which come to the surface during the drying process: once they are removed, this will not happen again. Use cleaning liquids moderately, because excessive use can cause infiltrations with possible swelling of the panel.

IT IS STRONGLY RECOMMENDED TO AVOID:
Alkaline detergents, detergents containing abrasives, soda or solvents, ammonia or acetone. Avoid furniture wax. Do not use pumice, metal wool, rough cloths or other abrasives.

In case of necessity, before proceeding with the cleaning, it is preferable to test it on a small, non-visible area, ensuring that the chosen product for cleaning is suitable and does not alter the color and opacity of the product.

ANODISED ALUMINIUM

For regular cleaning, it is recommended to use a soft cloth and only specific cleaning products.

To try to eliminate any scratches or light surface marks, we recommend that you use slightly abrasive products, specific for anodised aluminium.

IT IS STRONGLY RECOMMENDED TO AVOID:
Abrasive powders and products which can scratch the surface. Similarly, do not use metal wool pads and aggressive products on surfaces, such as those containing chlorine, muriatic acid, bleach.

POLISHED ALUMINIUM

For ordinary aluminium cleaning, it is recommended to use soft cloth and specific products. Minor scratches, or the regular loss of shine over time, can be restored using toothpaste and a soft cloth.

IT IS STRONGLY RECOMMENDED TO AVOID:
Abrasive powders and products or metal wool, which can scratch the surface. Similarly, do not use metal wool pads and products that are excessively aggressive to the surface such as those containing chlorine, muriatic acid, bleach.

GLASS

For the optimal cleaning of glass surfaces, it is recommended to use specific products for glass surfaces,

taking care to remove the surface layer of dust with an electrostatic cloth before washing the surface.

When glass is combined with other materials such as wood or metal, it is important not to spray the detergent onto the surface directly, but using a cloth instead. Most of glass cleaning products contain ammonia, which can alter the frame surface, e.g. wood, lacquered etc. Always use detergents with moderation.

IT IS STRONGLY RECOMMENDED TO AVOID:
Sharp-edged tools, scrapers, rasps or cleaning agents containing abrasive substances, alkaline products and solvents that can damage surfaces.

PLASTIC MATERIALS

For the regular cleaning of plastic materials, it is recommended the use of water and common cream or liquid detergents.

IT IS STRONGLY RECOMMENDED TO AVOID:
Solvents or acetone, because some materials might be affected. Metal wool or other abrasive materials. Never use furniture wax.



CITTERIO DATA SHEETS
SLENDER

PROJECT COORDINATION
CITTERIO MARKETING
AND COMMUNICATION

CGI
EIDO VISUAL
CITTERIO VISUAL DEPARTMENT

EDITION
2026.07

CITTERIO SPA
VIA DON GIUSEPPE BRAMBILLA 16/18
23844 SIRONE (LECCO) ITALIA
T +39 031 853545
CITTERIO@CITTERIOSPA.COM

CERTIFIED COMPANY

ISO 9001—ISO 14001
FSC® C141846
LEED® COMPLIANCE

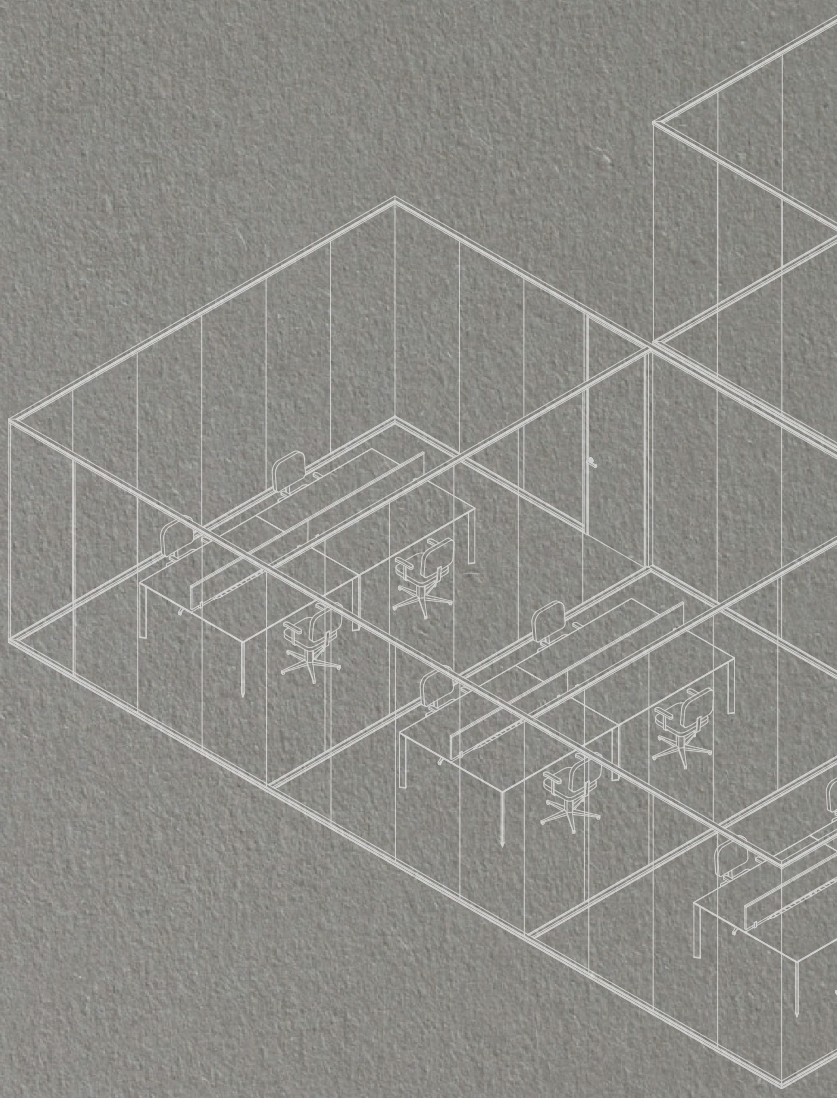

MOLTENIGROUP